TECO	OUTLINE DIMENSIONS 3-PHASE INDUCTION MOTOR	FRAME NO : D160

POLE	kW	HP	RPM
2	11	15	2940
2	15	20	2940
2	18.5	25	2940
4	11	15	1460
4	15	20	1460
6	7.5	10	970
6	11	15	970

Totally Enclosed Fan-Cooled Type, Squirrel-Cage Rotor.

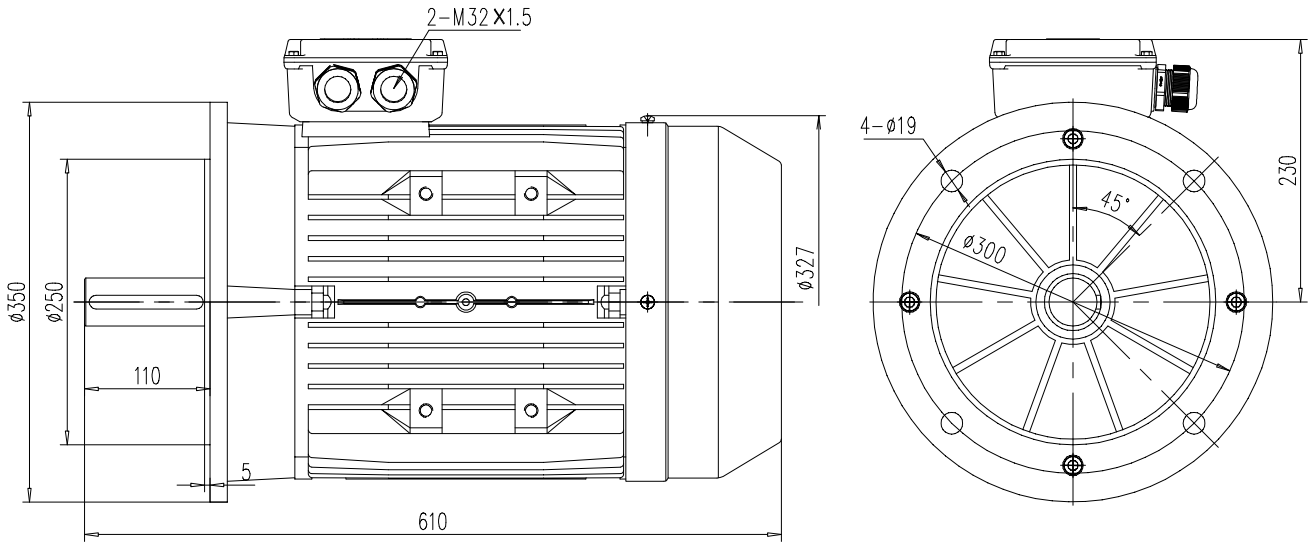

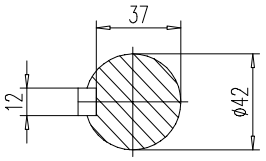

NOTES:
1. DIMENSIONS IN mm.
2. FLANGE MOUNTED IM3001.
3. FOR DIRECT DRIVE ONLY.
4. IP55 PROTECTION.

MAX ALLOY

DWN.	DP	16. 12. 24	REV : 00
CHKD.	AN	16. 12. 24	
APPD.	JC	16. 12. 24	